SuperYacht

international

Sanlorenzo - SX112

CODECASA 55 FRAMURA
BENETTI OASIS 40 M
EXTRA YACHTS 86

TECHNICAL: HYBRID FOR ALL
INTERVIEW: FABIO ERMETTO
CCO OF BAGLIETTO
DESIGN: THE NAVETTA 2.0

n. 69 - Spring 2021 - Euro 8,00 - US $ 16,50 - £ 8,99

10069

9 772035 588006

HYBRID

TECHNICAL

FOR ALL

by Andrea Mancini

Is a hybrid system installed on board an advantage or a disadvantage? or perhaps is it simply another complication? Is its use just confined to navigate in electric mode for a relatively short period so I can ascertain my boat pollutes less? E-Motion is a renowned supplier of hybrid systems suitable for yachts measuring from 15 to 65 metres. And therefore they are well placed to reply to our questions.

Something hybrid in a natural way means a union between different species. But when talking about marine engines hybrid wishes to express diverse ways of making propellers rotate: an electric and a diesel engine are certainly the most accepted and popular systems deployed. The same goes for hybrid automobiles with an electric and a petrol fuelled engine capable of developing loads of synergy among themselves. The degree of "hybridity" can be measured accordingly by taking into account how and how much the two engines work together.

Hybrid systems are devised to best exploit the full potential of each engine by using them alternatively and also simultaneously. Practically everything is based on the capacity of stocking energy in more and more capable batteries but not only because hi-efficiency electric engines play an important role guaranteeing up to 90% and more than that in delivering capacity. Their peak torque curve starts from zero RPM.

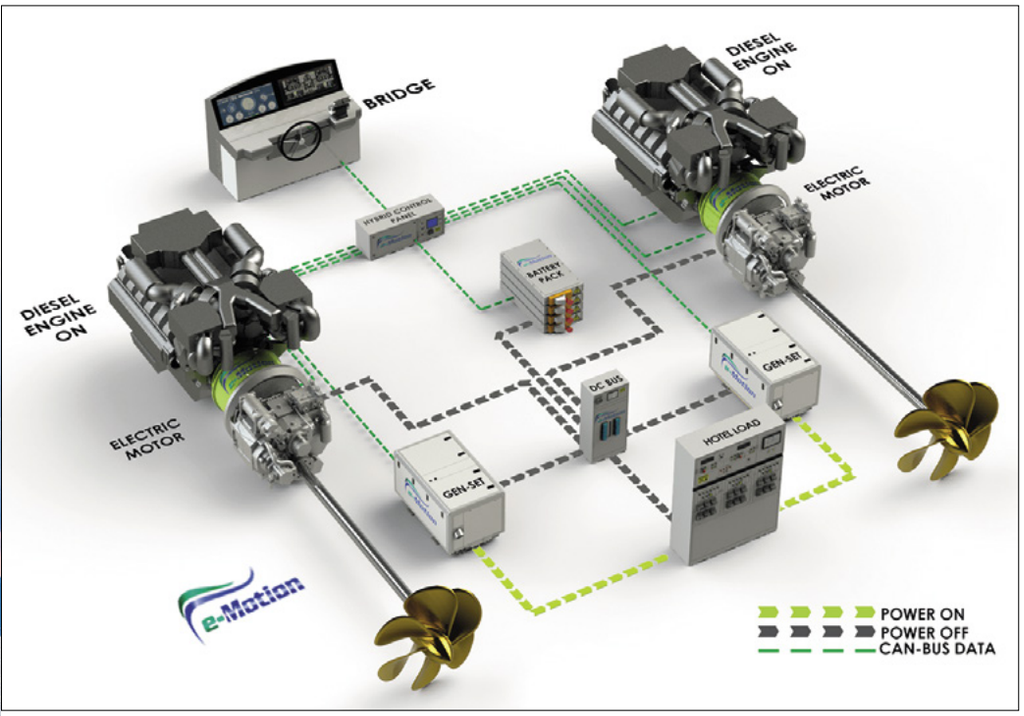

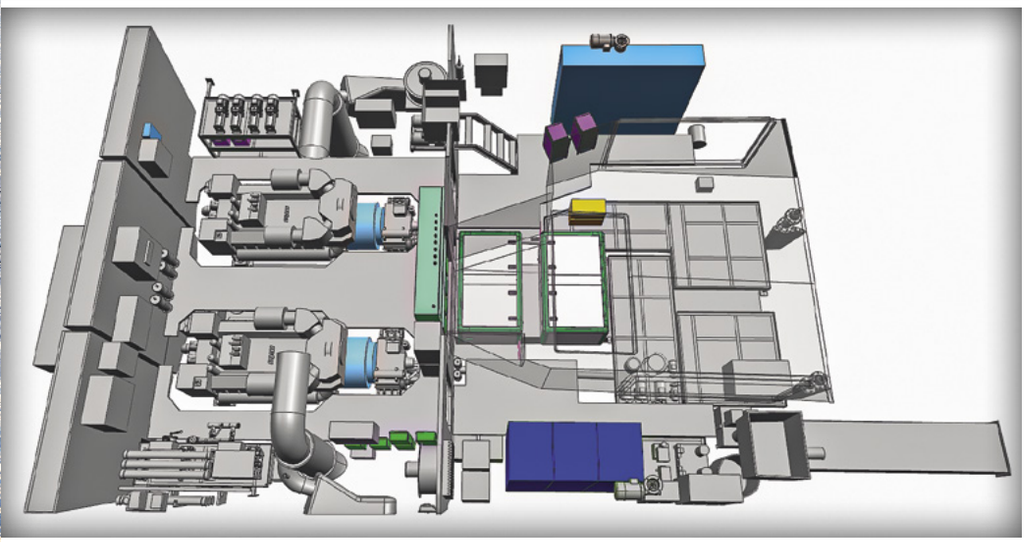

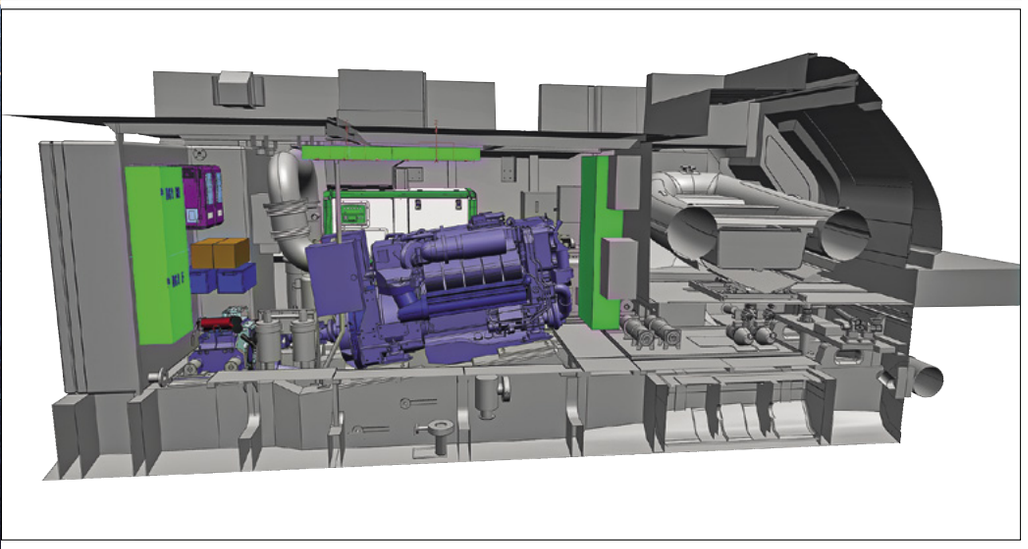

The redundancy of the elements paves the way to handle propulsion and generates energy on board according to required individual needs.
The hybrid E-Motion system does not entail changing the layout of the engine room in any way. Added components installed into the engine room of a 30 metre long superyacht equipped with twin 2,000 HP main engines are highlighted with diverse colours as can be clearly seen. The principal components are: pale blue for the two electric engines installed between engine and gear box/inverter, at centre in green there's the DC Bus attached to a bulkhead on the other side of which there are two gen. sets with a green frame. Above, in pale blue details of the 'hotel' electric panel inside of which there's the Hybrid control box while below a blue row of 'heavy duty' transformers complete the picture.
A hybrid system can be installed independently of the positioning of the drive shafts. The figure shows the engine room of a 25 metre long yacht where the electric motors are installed onto a V-Drive shaft. The green box on the left hand side represents the DC Bus, the right one contains the hybrid control panel while the batteries are fastened onto the ceiling above. The gen. set can be seen behind the diesel engine.

They are transmission free and can work easily from both engine types diesel/petrol and from generator sets as well. However we all know combustion engines do not excel in terms of efficiency specially in one or two circumstances which happen when RPM are low and only deliver 35% of their potential. By joining together two diverse separate engines you can in fact reduce fuel consumption and release less toxic emissions in addition to having a series of advantages which increase flexibility as well as the quality of life. The systems entail having both engines working side by side in spite of their differences and what is more important still is the makeup of the systems built for their integration and management.
In this context we must not overlook the work of those who propose and install hybrid systems and stock on board energy while remembering that the so called 'hotel' requirements installed on large superyachts are comparable to the engine power needed to navigate with. E-Motion delivers turnkey ready to go detailed in-

For all

	FUEL CONSUMPTION • Considerable fuel saving below 10 knots. • Cruising in 'econ' mode or "economy" (with two propellers running off a single engine) • Substantial reduction of engine hours when idling (while manoeuvring, and so on)
	MANAGEMENT • Significant reduction of gen. Sets' engine hours with variable rpm. • Significant saving on main engines' and generators' maintenance and servicing costs. • Negligible cost of maintenance on the hybrid system installed. • Reduction of overall man hours required to carry out maintenance and possible repair work (fewer hours on diesels).
	TOXIC EMISSIONS • Enhanced reduction of CO_2 and NOx emissions. • Zero emissions when lying to an anchor in a bay and when cruising slow, or at manoeuvring speed and more). • Minimal emissions released when navigating with gen. sets alone. • Zero emissions over short hauls, (they're getting increasingly longer).
	AT SLOW AND VERY SLOW SPEEDS • Dynamic positioning can be exploited in these circumstances. • Navigating at low and very low speeds (below normal idling rpm) fuel consumption drops systematically. • Zero release of emissions when at trawling speeds.
	COMFORT • Reduced noise and vibration. • Total comfort in night nav. mode.

Table 01 - THE BIG 5: The main advantages of an e-Motion hybrid system installed on board.

stallations according to owners' requirements through the full integration of other E-Motion components previously installed. We're talking about electric E-Motion engines with or without clutches through which to engage or disengage gen. sets equipped with variable RPM. Lithium batteries and hybrid control panels, and the so called DC Bus as well. This possibility includes the elements supplied by other sources starting from combustion engines and the companies with which E-Motion has signed a commercial agreement which allows integrated management of the entire system. All of this allows E-Motion to supply complete hybrid user friendly systems specially devised for a yacht's specific requirements including flexi use, less fuel consumption enhanced comfort and much more. Numerous ship yards have already converted or are currently converting to hybrids, sometimes through choice and other times to be part of an ever increasing 'green' market. E-Motion is focused on promoting negotiations throughout the world. We're talking about shipyards building large superyachts like San Lorenzo, Tankoa, Perini Navi, and several others. There are also several yards proposing smaller yachts like Viking Yacht, the Azimut group, Benetti, Gruppo Ferretti and more and series built ones for example where amortising greater costs is more difficult since the products offered are still innovative. Not for E-Motion though, for them time has come to rise to the challenge by promoting hybrids but not on large superyachts alone. It is no coincidence the following text appears on the web site: "E-Motion is the unique supplier of standardised hybrid systems for series built yachts ranging from 15 to 65 metres".

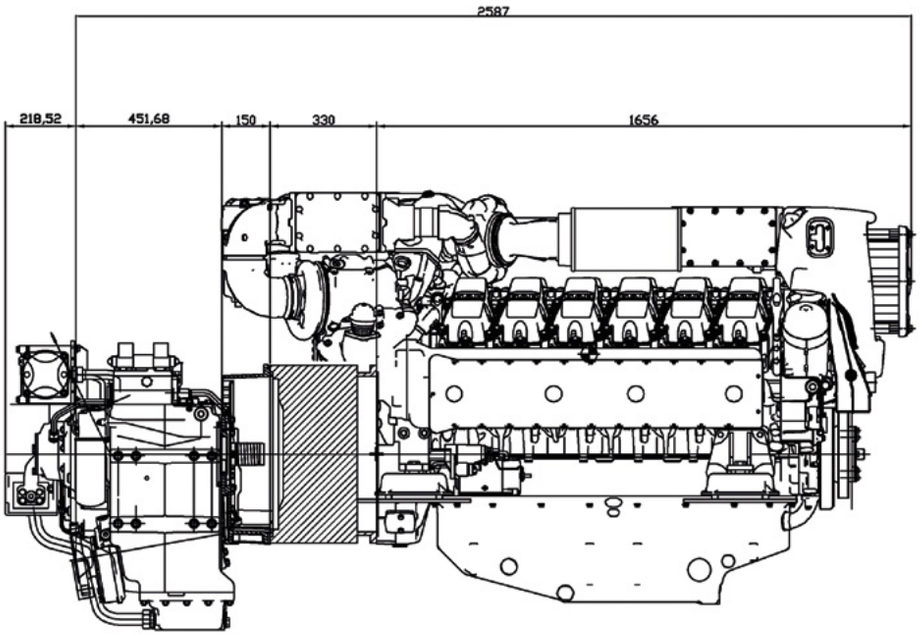

Compact E-Motion engines practically feature the same space exploited by the main diesel engine. The drawing shows the 240 KW electric engine which increases the length of a MAN 12V2000 engine by just 33cm. This (2,000 HP) MAN model is normally installed into yachts measuring from 80' to 120'.

A close up view of the Hybrid Control Panel installed in "Bintador", Tankoa's 50 metre long superyacht.
San Lorenzo's 106 Hybrid Bridge equipped with a Simrad panel integrated with components making up the hybrid control panel.

COMPARING GENSETS

Variable Speed Genset from 80KW to 300KW - Comparison

Brand	Model	Power kw	RPM	Dimensions MM	Weight KG
E-MOTION	VS 80	80	3300	1089*678*824	498
E-MOTION	VS 300	300	3300	1730*935*923	1100
Onan	MDKBV / DV	19/23	1500/18	1127*602*698	422
Onan	MDDCG	50	1500	1783*840*1039	1167

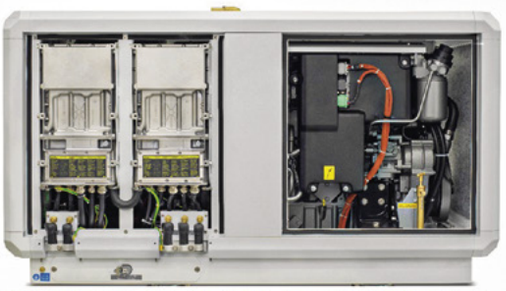

In order to deliver a competitive hybrid system compared to a conventional engine, E- Motion has developed a series of variable speed gen. sets ranging from 80 to 300 KW with unprecedented performances. The table above clearly shows that the E-Motion VS80 sports similar weight and size to a conventional 19/23 KW conventional generator set which is 4 times less powerful, much like the 300KW E-Motion VS300 gen. set which sports similar specs to the 50 KW conventional model but delivering 6 times less KW. This is thanks to high efficiency marine engines integrated with all round permanently magnetised alternators comprising inverters and more. The photo clearly visualizes the VS300 E-Motion gen. set capable of a 300 KW output: The back plate has been removed to show white twin inverters on the left hand side in the generator set.

Sanlorenzo SL 106.

For all

To find out more about the topic addressed we asked E-Motion founder and owner Michele Maggi a few questions since he's also one of the first to introduce hybrid engines into the yachting scene with Ferretti's Long Range 23 metre superyacht which was converted with one of the first hybrid systems back in 2007. From then on the knowledge acquired and the technology going with it have leaped forward and E-Motion was born and schooled to become one of the world's major players in the sector by supplying complete ready to go turnkey hybrid systems.

Let's start from the beginning: what does hybrid mean on board?
First of all you have to be aware of the fact that hybrid systems can be either in series or parallel. The technology applied is the same in both cases, which means we can propose both forms. However in terms of management and of efficiency, they differ considerably.

Let's discuss the Serial hybrid system first
A serial hybrid system is nothing more than a diesel electric system with a battery pack installed to capture power peaks rewired by several systems. In a serial hybrid system generator sets featuring variable RPM can be installed anywhere convenient with obvious advantages in terms of rationalisation of the interior layouts. Previous special spots in traditional engine rooms can be deployed for other uses while gen. sets and batteries can be installed to my own discretion, even in the bow area. This system is more efficient because the batteries installed respond more sharply to variations in terms of loads and output when measured against a classic diesel gen. set which becomes inefficient and uses up loads more fuel when it has to handle any variation in RPM/ load factors. The battery always supplies electricity with the same efficiency. In a nutshell, a serial hybrid system is a great advantage in terms of rationalisation and optimisation of spaces. A little less so in terms of consumption. However it is not a redundant or obsolete system because electric engines are normally installed in pairs. If the yacht sports two propellers and the inverter transforming AC from the gen. sets into DC destined to the batteries alone is normally one only, the only redundancy is in the number of installable generators. Surely I will enjoy greater comfort because when the yacht is lying to an anchor in a bay I can remain without using the gen. sets but can exploit energy from the batteries and thus be freed from any undesirable noise. A further advantage is in having a minimum full range with zero emissions at really low speed. Or to opt for a conventional diesel electric mode. This latest is a serial system. In any case a serial system is foreseen for displacing or at the most semi displacing hulls alone. Planing hulls's request for power is such that the gen. sets installed will never be able to supply enough energy. Therefore 14, 15 knots represent the limit of a serial hybrid system's speed.

And what about hybrid parallel systems?
That's precisely what we're proposing. There are no special advantages concerning the engine room area which remains where it is and maintains standard dimensions. In actual fact even if there are more elements to relocate the whole hybrid parallel plant in installed into a standard engine room thanks to the smallish size of several elements and to less powerful and smaller main engines as well. This is because the 'missing' HP needed to reach top speed are delivered by the electric engines absorbing power enough from variable RPM gen. sets acting as boosters. In practical terms rather than installing twin 2,400 HP engines a pair of 2,000 HP ones will suffice but additional power from two electric 300-350 HP electric engines van be deployed to deliver the same maximum power with a gain in engine room space and less weight. The 400 HP missing from the example translate into less weight which largely compensates the addition of the electric engine. So the bottom line is that the overall weight of the system is lighter.

This having been said, a hybrid parallel system in a yacht with traditional drives and the same features, what advantages are there when compared to a hybrid serial system?
The real advantage is in the redundancy of the elements which allow engines' management and the creation of tailor made on board energy as specifically required. The enhanced overall efficiency is , not be forgotten greater safety at sea. In the hybrid parallel system there are diverse sources of energy that can be exploited together to handle everything, from the main engines to generating electricity for the 'hotel' segment. Our Platinum version comprises 5 independent energy sources represented by two main engines, two gen. sets and batteries. Consequently there are 5 different ways of navigating, manoeuvring, returning to port and so on. And with enough energy to take care of the 'hotel' sector, which represents another safety factor, while reducing repair times should anything break or simply requires servicing during a holiday. Should a diesel engine break down with a conventional main engine system the holiday is over. But should it break down with a conventional hybrid system of ours you can continue navigating perhaps more slowly but without having to stop. Starting from this perspective, toying with several possibilities which allow for considerable savings in running costs and accrued comfort there are as many as 10 diverse modes of exploiting the entire system in much the same way as you would do when using diesel main engines on any other very normal boat.

Well 10 different uses available in the system are many. Tell us something more.
The ten modes are the ones loaded into our Platinum version

Michele Maggi with his daughter Sofia.

which is our top of the range hybrid version we have engineered. The initial modes start with "full diesel" traditional propulsion alone, with no hybrid system up to "Zero Emission" navigation mode with all diesels turned off which means running off the energy accumulated in the batteries, the next step is the "Diesel Electric " navigation mode which means exploiting gen. sets' energy with which to fuel electric engines. But the hybrid parallel system enhances use of interesting diverse modes. To begin with there is the "Economy" mode where only one engine is propelling the yacht at ideal max. torque and consequent RPM. In the given case the whole system's energy resources derive from the alternator linked directly to the drive shaft. In this mode both propellers are at work, one receives power and thrust from the diesel engine and the other propeller from the electric one. Furthermore, the energy required to propel the yacht, handle the hotel segment and the recharging of the batteries is generated by the alternator. The second Diesel engine is switched off and so are the gen. sets. In this mode the yacht is expected to cruise along at 10, 12 knots with 30 to 35% less fuel thereby reducing the main diesel engines' hours of use comprising the hours clocked by the gen. sets as well.

And should I wish to go fast?

The hybrid parallel system will take care of that aspect by exercising a more efficient use of the engines which exploits them better also when wanting to go faster. The "Cruising Boost" mode exploits both main engines together with the gen. sets performing continuously at about 80% of their full potential at recommended cruising speed which translates into achieving greater speeds since all energy/power resources working together simultaneously (stemming from the different units) off load onto the same drive shaft upping top speeds of the same yacht model when used traditionally.

In practical terms at 80% of the recommended cruising speed you add 20% more power delivered by electric motors (booster) fuelled by generators tuned to deliver 80% which means cruising over long hauls at top speed exploiting the diesel engines and gen. sets with MCR (Maximum Continuous Rating). Well were I really pushed for time I could use Power Boost mode where the power from the electric engine is added to that of the main diesel which increases max. power further. This mode exploits all of the engines' potential (100%) which results in a speed increase of 3 to 4 knots. Acceleration too is increased up to 25% more according to the yacht's hull shape but is also due to the fact that electric engines sport a greater torque when compared to main diesel ones used to propel yachts.

Considering the sum of the complexities and the considerable number of diverse modes involved, is it worthwhile installing such complete and sophisticated plants on small yachts as well?

Our hybrid systems can be simplified accordingly. For example on small yachts where the requirements are more limited there's no interest for the full Platinum system since there's no need for diesel electric engines. On the other hand a 50' fisherman model is definitely more useful when equipped with a booster so as to reach the chosen fishing grounds in the shortest time possible in much the same way as exploiting full electric mode when trawling slow. In that case I can avoid installing a gen. set which would only supply energy to the batteries and to our electric engine alone. Weights and encumbrances are about the same, but the standard power house of 1,500HP with an extra 150HP or 10% obtained from the electric engine delivers greater performance for an hour. Then as I manoeuvre and prepare to fish while patrolling the area, I charge the batteries for half an hour before switching everything off. So as to fish in a noise free and clean air environment I've built a tailor made hybrid plant specifically for small yachts excluding gen. sets but with enough redundant energy provided by twin engines and batteries.

Let's take a closer look at technical details. Which are the main features that make a hybrid parallel system stand out as is the case for the E-Motion system?

Let's begin with the DC Bus. To me it is a lake filled with energy which fills up and empties. It fills up with the energy produced by the gen. sets, or by electric engines linked to the main engines, or with energy supplied by the batteries. It empties accordingly, mainly due to the requirements of the principal engines. Management of the energy flux from and for the DC Bus is nevertheless a central point of any hybrid system deploying Droop Technology,

a technology dependent on inverter software (electronic devices capable of converting incoming DC into exiting AC and vice versa to modify parameters in terms of amplitude and frequency –edn.) which comply to a set of rules to ensure that essential services are always preserved. In practical terms when we hear that an inverter is losing voltage beyond the DC Bus and therefore requires energy to some device or apparatus we need to supply it with more energy from the other inverter installed before the Bus which will request the other gen. set to deliver more energy obtained by raising RPM. All of this is carried out to maintain the lake with the appropriate level of energy. Droop Technology works each inverter in a precise voltage range thanks to specific software. The major difficulty encountered was in the development of this specific inverter software comprising PMS Power Management System which must inform every inverter and diesel engine what it must do according to what is happening on board (request of power to engine, to hotel, and so on).
The DC Bus handles energy peaks, occurring when working the bow thrusters for example while the PMS tells the system how to go about reintegrating the energy lake and how to keep it at the desired level. This special PMS software we have also developed for independent single inverter units allows us to work the system correctly. But in addition to producing software we are the only ones supplying every component that may be required for the hybrid system comprising, batteries, inverters, battery chargers, DC Bus junction boxes and gen. sets with variable RPM, transformers, as well as hybrid control panels that act as interface with the 'hotel' segment in terms of energy requested which is then handled by the PMS. And we're the only ones that can be defined as being system integrators.

What do you mean by system integrators?
The system works as long as there's a form of integration which makes every element function in a synergetic field with others according to a set of rules. For example if I were to open up the throttles completely with our diesel engines off while I'm cruising in diesel electric mode and the system is not fine tuned, the gen. sets will go to max RPM while trying to exploit every ounce of power which would result in releasing loads of black smoke. Instead the system will have to manage the request by taking a little energy from the batteries and nurse the RPM of the gen. set gradually up with a correct curve. This exercise cannot be carried out by a single automotive plant alone because it would have to draw up projects for hybrid systems with components from other groups.

Should we have understood well, a single manufacturer cannot produce hybrid systems because his engines would necessarily have to be integrated with parts from other manufacturers. But then how's this been possible for you since you are smaller than any automobile producing firm?
It's taken a long time. We've developed ad hoc systems for both electric engines and clutches which we own. We're talking about radial flux permanent magnet brushless electric motors like those used in the automobile industry which we have built according to our specs. For example the casings are water tight with waterproofed resins. They are optimised in terms of weight and encumbrance: a 240 KW engine complete with clutch/ gear inverter weighs 270 kg and makes the main engine only 30 cm longer. These are figures that make competitors really wonder! On the other


Evolution 42 M

hand we have agreed to purchase main engines from the automotive industry around the world as well as the engines we use for our gen. sets. All of this is well integrated into our hybrid system

Can you expand on this?
As for the main diesel engines we've made a worldwide agreement with MAN for both sales and assistance. Our hybrid system is studied and engineered to be assembled onto MAN engines (universal joints, coupling flanges, support brackets, electronics and more). This means MAN guarantees

the engine as if it were a normal installation since any officially recognised workshop in the world can carry out whatever is required on the engine via the conventional MAN electronic control unit which dialogues with the hybrid system but is not substituted or bypassed. As for variable RPM gen. sets we negotiated the same agreement with Yanmar and FCA which possess compact and low noise marine engines which better adapt to our needs. We use them as engines for gen. sets. In practical terms we purchase a Yanmar, or an FCA marine engine with its own controls panel and we convert it into a gen. set integrated with our permanent magnet alternator, with our inverters and so on. Thanks to the agreement , Yanmar and FCA recognise our modifications and cover the warranty period, carry out maintenance and standard scheduled assistance in all the authorised workshops because we can work it as a marine engine attached to which there's a propeller.

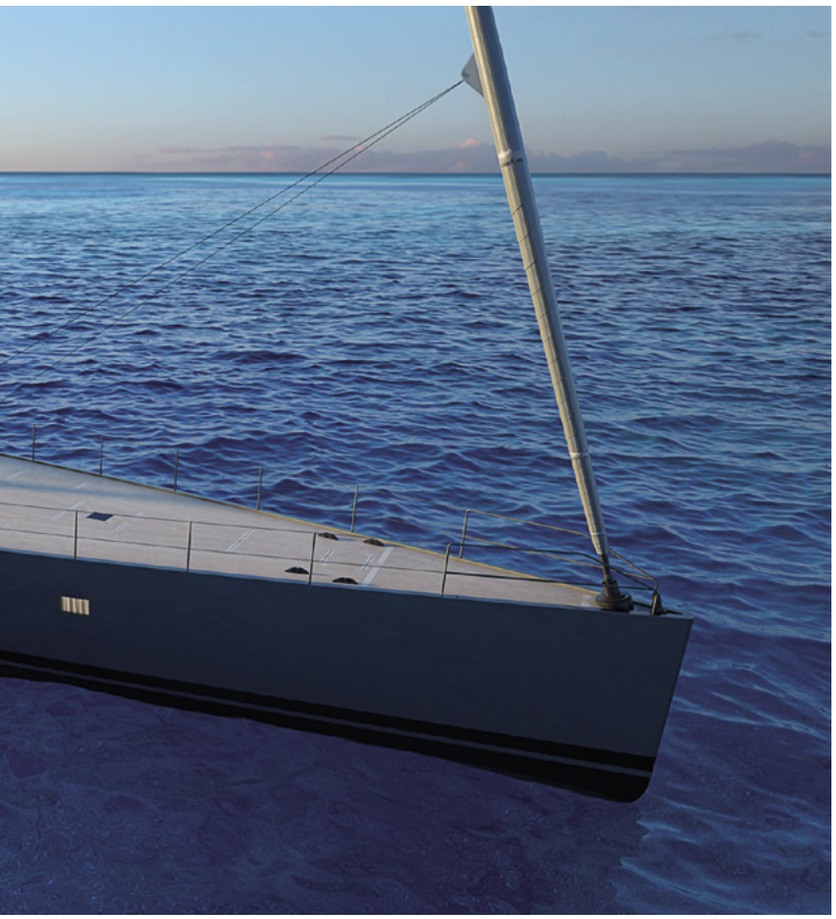

If the assistance and maintenance carried out on marine engines and gen. sets are standard as foreseen by single auto motive firms, what happens in regards to your components or spare parts?

As said already, our hybrid system has been drawn up by developing the electric engine which propels the yacht, the software, gen. sets and everything else attached to it as well. We're talking about spare parts, components if you like just like everything else we supply, they do not require any maintenance whatsoever: they either work or are simply substituted since they are not repairable.

Any way even a simple cell. phone will enable us to check out every electronic component installed on board and to see whether or not it works correctly, while checking out on what is in fact happening. If something goes amiss or fails to work it will be substituted by another. This is a job for any mechanical engineer coordinated by our team once the part in substitution of the other has been received. However I wish to point out we have had a considerable number of yachts sailing everywhere for five years and so far we've had to substitute no special parts: inverters the inverters are industrially manufactured ones, electric engines do not break down, clutches electro magnet ones are so simple they have never been a problem so far. As for the diesel engines we already specified our hybrid panel allows us to isolate various parts completely including thermal/ combustion engines so that any mechanical engineer can handle and deal with normal maintenance and as if it were a normal engine or gen. set comprising its very own standard controls panel.

Are things any different for the shipyard installing your hybrid system?

The shipyard installs the propulsion system like an ordinary one with all components already installed where they should be. The remaining components need plugging in only. This is precisely what happens when installing normal diesels into the engine rooms. Everything has been integrated and the mechanical engineers at the shipyard have less to do than in previous times. Today by comparison with traditional installations there's a 'modern' mixed cooling system which uses plain water cooled by salty water applicable to our inverters, electric motors and batteries. Water pumps form the only section of the system subjected to maintenance. The remainder where everything else has been integrated is not perceived as being complex even though we're talking about a hybrid engineered system.

What changes in terms of encumbrance in the engine room?

The engine room remains the same because we have developed a line of gen. sets at variable RPM from 80 to 300 KW that sport the same weights and sizes of normal gen. sets with an output of 55 KW. Our electric engines too are so compact they can be installed into any engine room. Imagine that the thermal engine on which the electric one is linked to is only 30cm longer when referring to our largest 300 KW motor. Considering a 35 metre long yacht equipped with twin 2200-2600 HP engines, batteries and gen. sets, the SCR device and AdBlue (Urea) additive container tank comprehensive of our hybrid system the yacht, is still two tons lighter than a traditional engine room's and is 30cm shorter in spite of the electric engine. If then we also consider that a smaller diesel requires less Urea (additive) we still save 3.4 tons of less weight. All of this thanks to a smaller engine. And finally we can still install another 200 KWh worth of batteries equal to one ton which means two less by comparison to a standard engine room. Nothing different shows up in the engine room if it weren't for the DC Bus and the hybrid control panel which is anyway practically negligible in terms of size because everything has been miniaturised.

Our DC Bus is very small. The envisaged size for the 50' yacht are 60x40x30 cm which can be placed anywhere and to become a Platinum version it needs little more only: 120x60x30

cm. the same goes for the hybrid control panel which measures 90x60x30 in the Platinum version. In the small versions it becomes a series of components connected to a Simrad navigation monitor.

Why should an owner choose a hybrid system?
Every time I talk about the potential hybrid systems possess, my clients find their usefulness difficult to understand because they simply can't imagine how they will make use of it all. Once on board perspectives change and a hybrid system will affect the use of the yacht considerably. At least that's what I'm told. In recent times they would employ 5 day time hours at 25 knots without being able to do anything on board other than having to endure little comfort and noise, now they can safely cruise by night at 12 knots exploiting the full electric mode in total comfort without sacrificing a single day of their holiday which was otherwise spent in transferring the yacht to its holiday destination and back.
At these speeds consumption is reduced by two thirds and further more I reduce engine running times comprising the gen. sets thus avoid having to stop the yacht to service them. In a nutshell the boat is used in a diverse way not only where transfer is concerned but also in the short trips you do in diesel electric mode at displacing speeds while enjoying the cruise perhaps during lunch. All of this and more means lower running costs: up to 50% less fuel, fewer engine running hours when compared to yachts moored in a bay with gen. sets switched on 24/7 while a hybrid requires half an hour per day and an hour to replenish the batteries. Gen. sets are normally serviced 3, 4 times every season, with a hybrid system once a year. Lately, thanks to advanced technology where everything can be accomplished electrically and without releasing toxic waste they are considerably less expensive to run as previously mentioned. At the end of a typical day we'd be looking at loads of fuel saved where diesels have been working at low efficiency levels, again this means saving on fuel consumption, and less all round wear and tear because I would have been manoeuvring slow, anchoring in crowded spots and anyway more at low speeds. No pollution, no noise on board but greater comfort in luxury yachting are today's challenges and hybrid systems are the solution.

The hybrid option brings many advantages as we've just witnessed. But indicatively speaking how does the cost of a hybrid solution compare to a yacht without one? How much does it incur?
Al momento scegliere un sistema di propulsione ibrido costa ancoAt the current state of play opting for hybrid systems is even more costly. But the time needed to offset this choice shortens day after day. For example with an intensive use of the yacht, the cost of one of our hybrid systems can be amortised in just a couple of years thanks to the savings at stake and thanks to diverse exploitation of the yacht itself. In addition to this our systems are modular therefore they're easily adaptable to diverse solutions according to the size of the yacht. The cost of the hybrid system will be tailored to specific requirements knowing that all that is spent will be fully exploited and depreciated in no time at all. A little like what happens to motor cars, where in the foreseeable future the engines installed are destined to be electrically powered. Anyone taking to a yacht with our hybrid system today will have a yacht equipped with a considerable added value tomorrow.
For further information: www.e-motion-hybrid.com


Tankoa 501 S